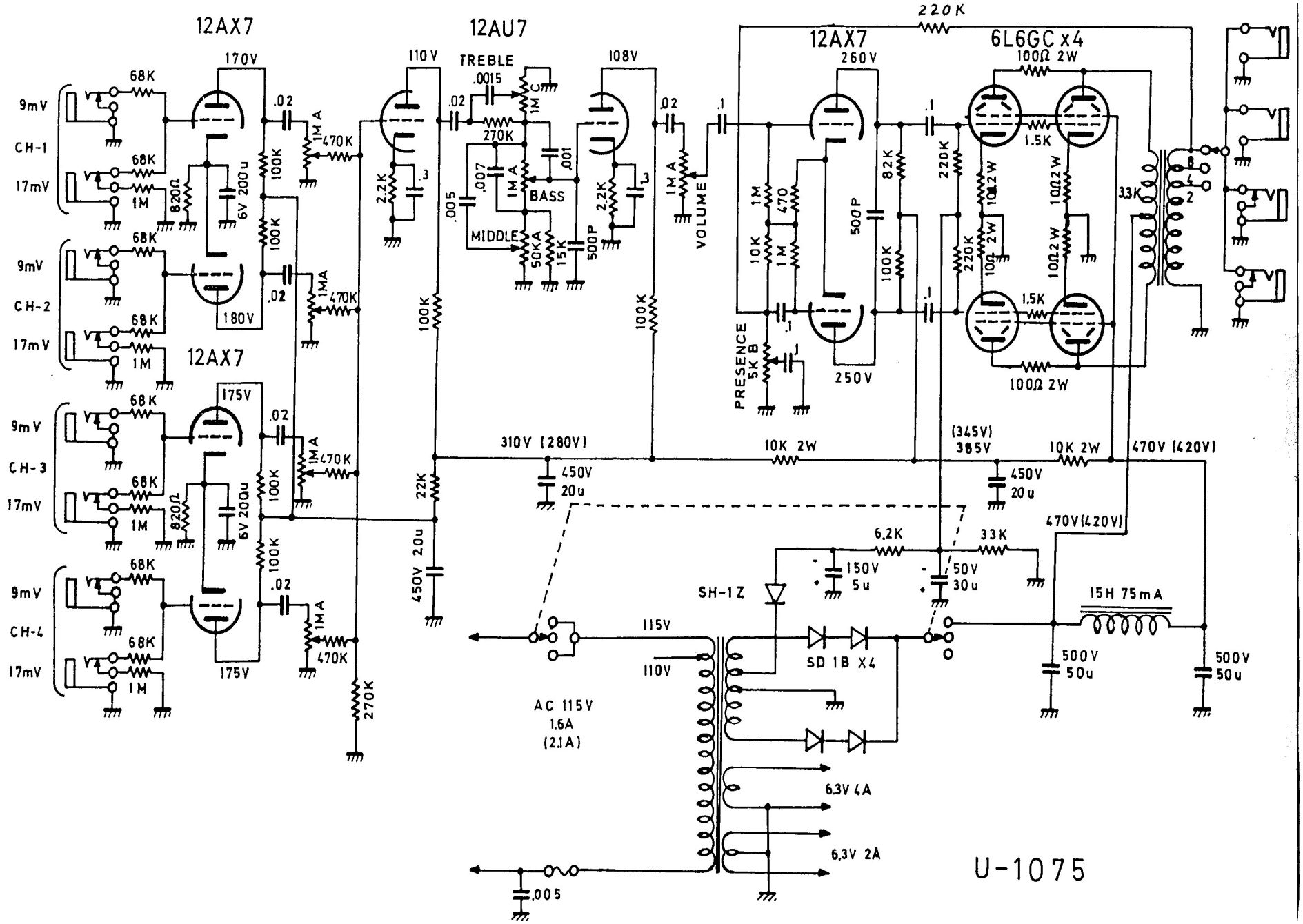
12AX7
12AU7
12AX7
6L6GC x4
12AX7
220K
170V
110V
TREBLE
108V
260V
100Ω 2W
9mV
CH-1
17mV
68K
.02
1MA
470K
.0015
1M
270K
.007
.001
BASS
MIDDLE
50KA
15K
500P
2.2K
.3
VOLUME
.1
1M
470
10K
82K
220K
1.5K
10Ω 2W
33K
8
4
2
9mV
CH-2
17mV
180V
100K
6V 200u
820Ω
.005
PRESENCE
5K B
250V
100Ω 2W
9mV
CH-3
17mV
175V
310V (280V)
10K 2W
(345V)
385V
470V (420V)
450V
20u
22K
6.2K
33K
150V
5u
50V
30u
470V(420V)
9mV
CH-4
17mV
SH-1Z
15H 75mA
115V
110V
SD 1B X4
500V
50u
AC 115V
1.6A
(2.1A)
6.3V 4A
6.3V 2A
.005
U-1075